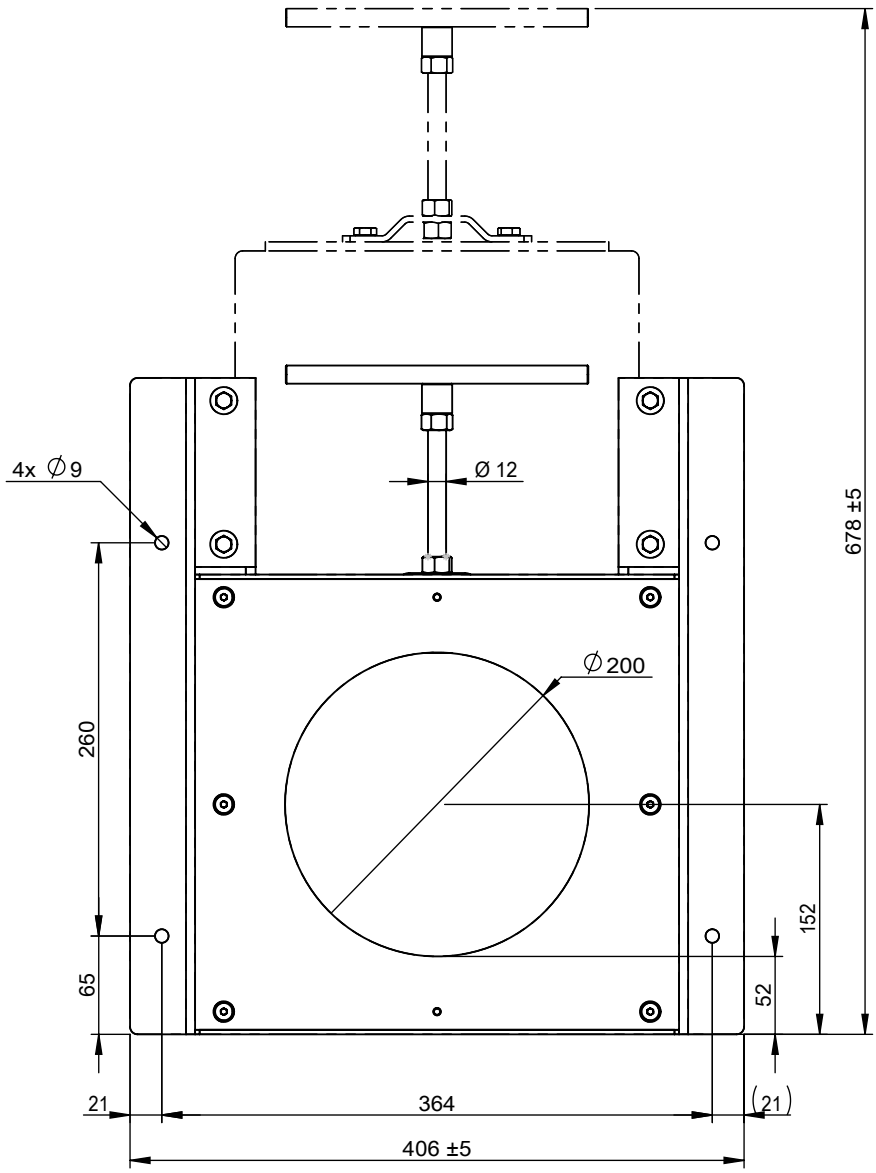

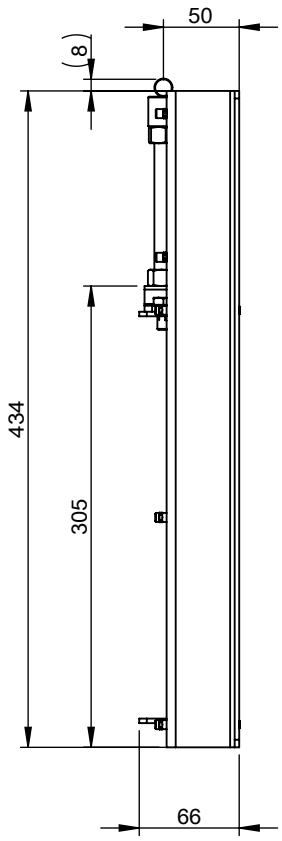

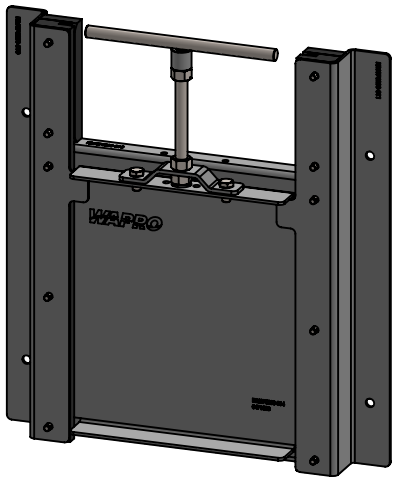

Designed By	Approved By	Created Date	Units	General Tolerance	Scale
RE	LL	2021-12-20	[mm]	ISO 2768-1 m	1:5

Material	Comment	Updated
	PN100444	08-09-2025

Weight [kg]	Box Volume [m³]
7.99	

Description

WaGate Spjæld SPS-TL DN 200 AISI 316

WaGate Sluice gate SPS-TL DN 200 AISI 316

Article Number	Drawing Number	Rev	Sheet
V26076200	SPS-TL Ø200_en		1 (1)

WAPRO
www.wapro.com

© 2021 Wapro AB. This document is subject to copyrights owned by Wapro AB. Any amendments, republication, retransmission, and/or reproduction of all or any part of the document is expressly prohibited, unless the copyright owner of the material has expressly granted it's prior written consent. All other rights are reserved.