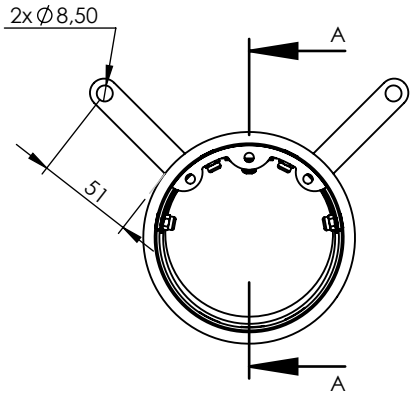

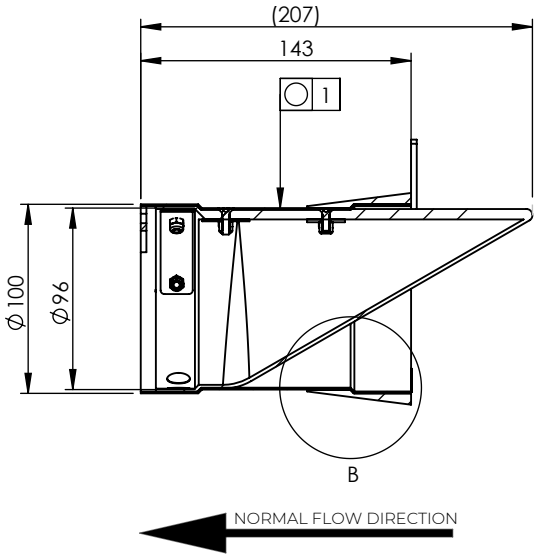

A-A

DETAIL B
SCALE 1 : 2

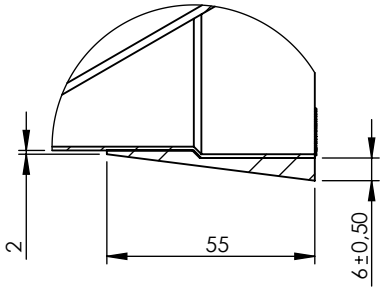

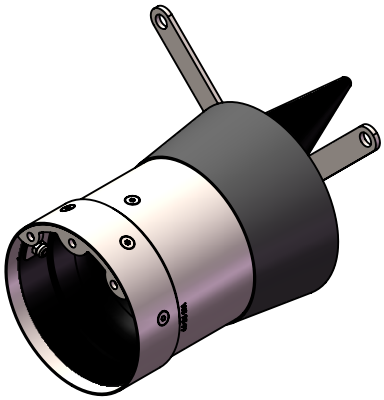

Designed By	Approved By	Created Date	Units	General Tolerance	Scale	
FG	PW	2020-01-02	[mm]	ISO 13920A	1:4	

Material	Comment	Updated
AISI 316L / EN 1.4404		2024-03-13

Weight [kg]	Box Volume [m³]
0.60	0,0022

Description

WaStop DN110

Short with double collar

Article Number	Drawing Number	Rev	Sheet
WS101-S-SHDC	ws101-s-shdc-en	A	1 (1)

www.wapro.com

© 2021 Wapro AB. This document is subject to copyrights owned by Wapro AB. Any amendments, republication, retransmission, and/or reproduction of all or any part of the document is expressly prohibited, unless the copyright owner of the material has expressly granted it's prior written consent. All other rights are reserved.